Altima

Quick Start Guide

CE	TYPE Altima	MD	Rev. 2026-06

≤ 130 kg

SHOP

1

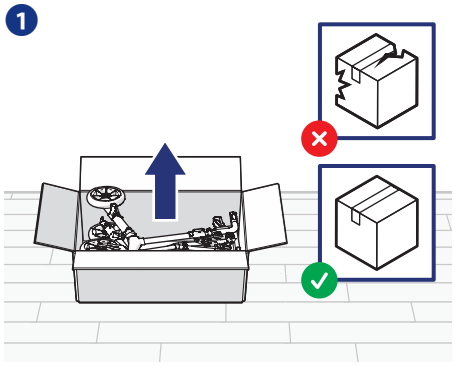

2

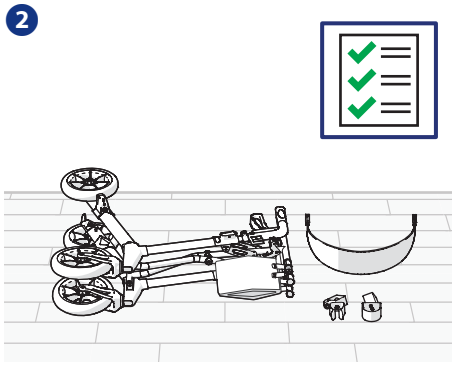

3

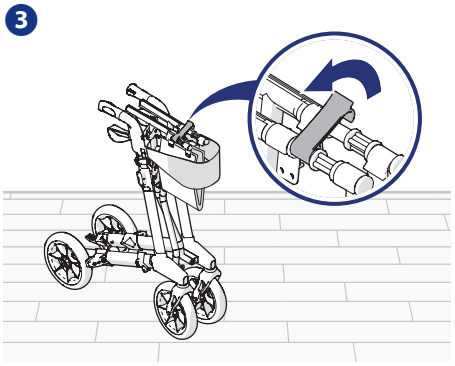

4

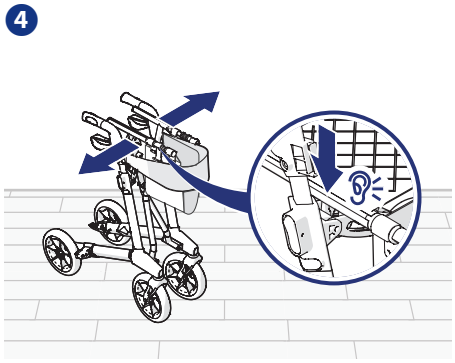

5

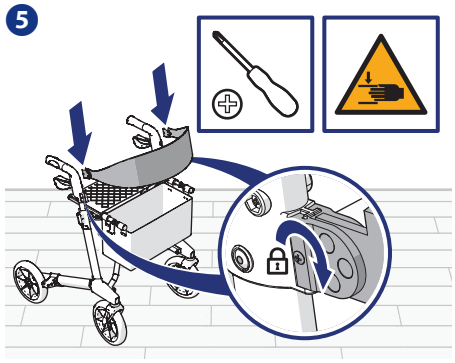

6

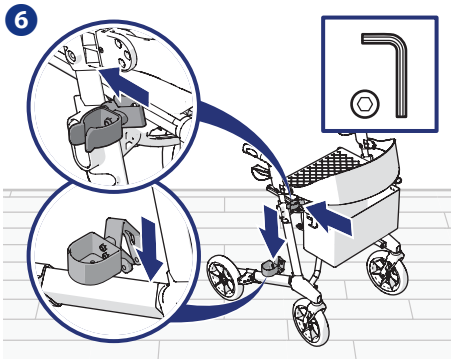

1

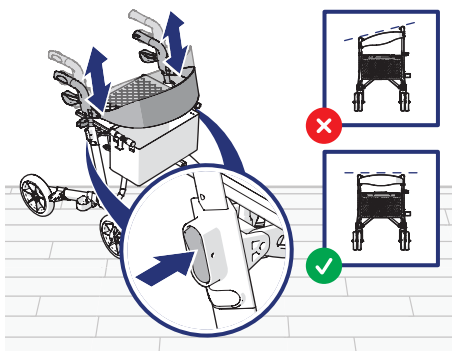

2

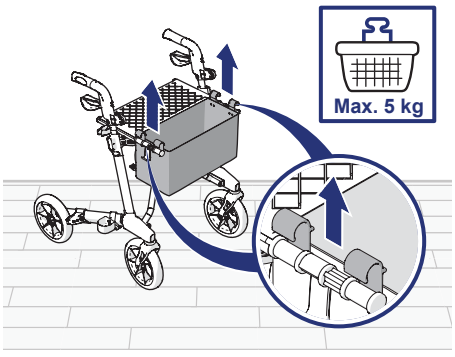

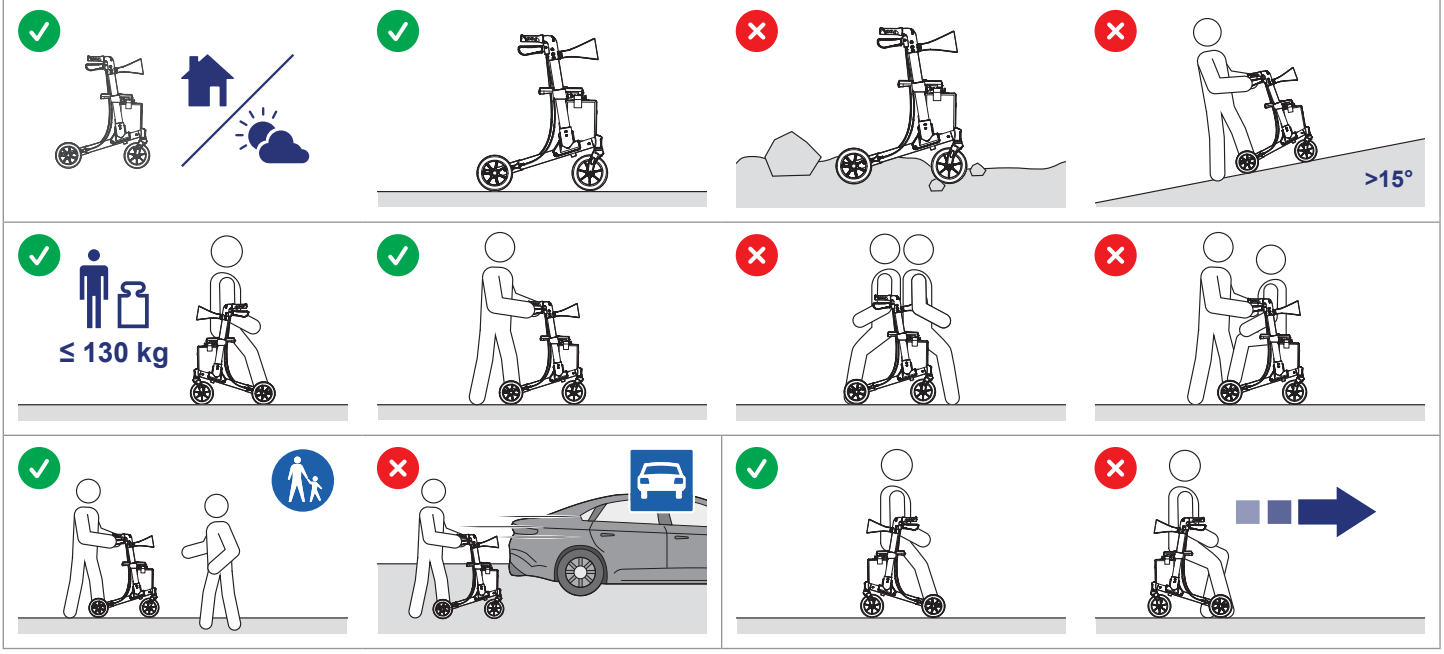

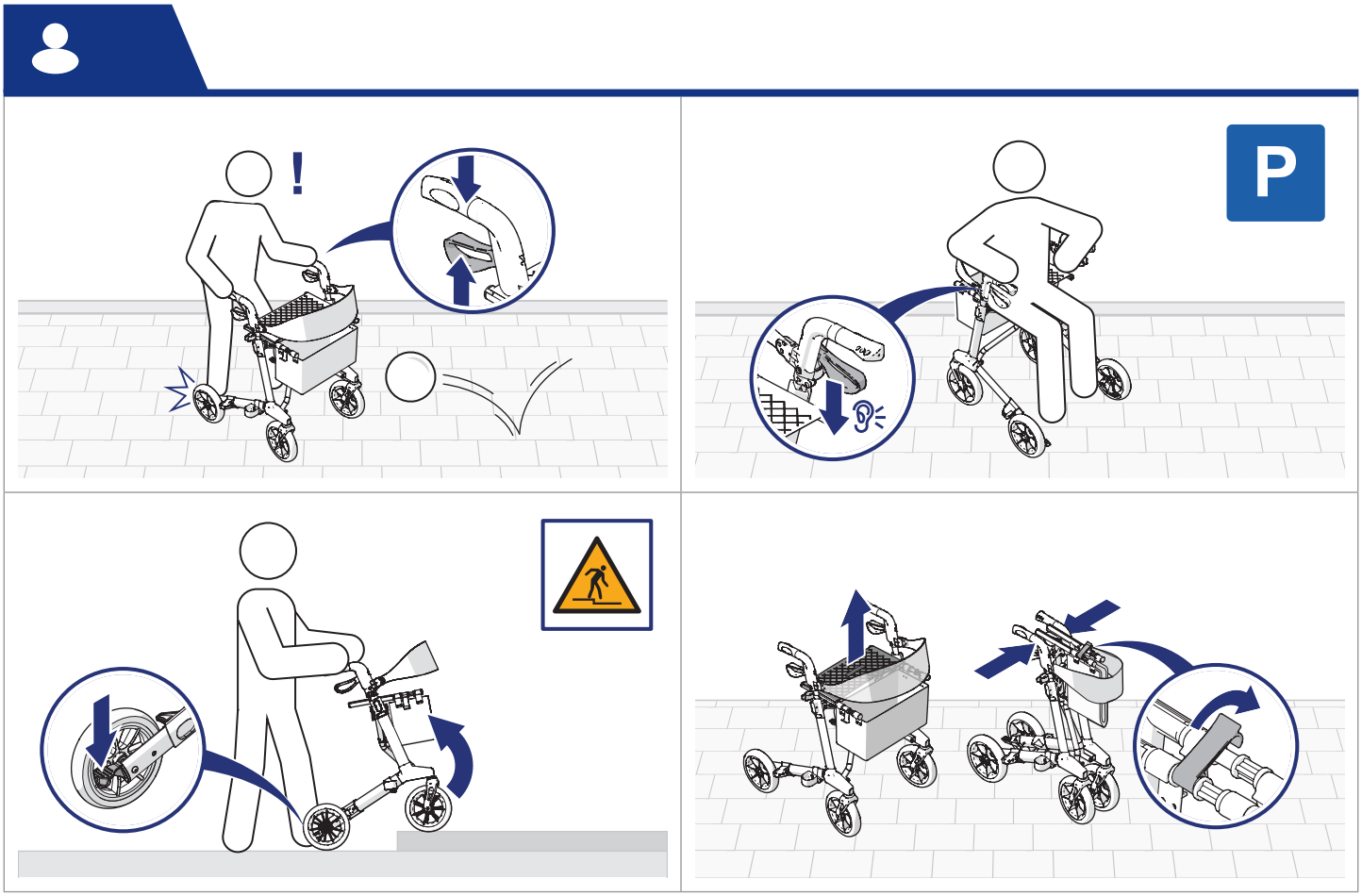

VERMEIREN
we care for you